1. Color sensor SPECTRO-3-28-45°/0°-JR
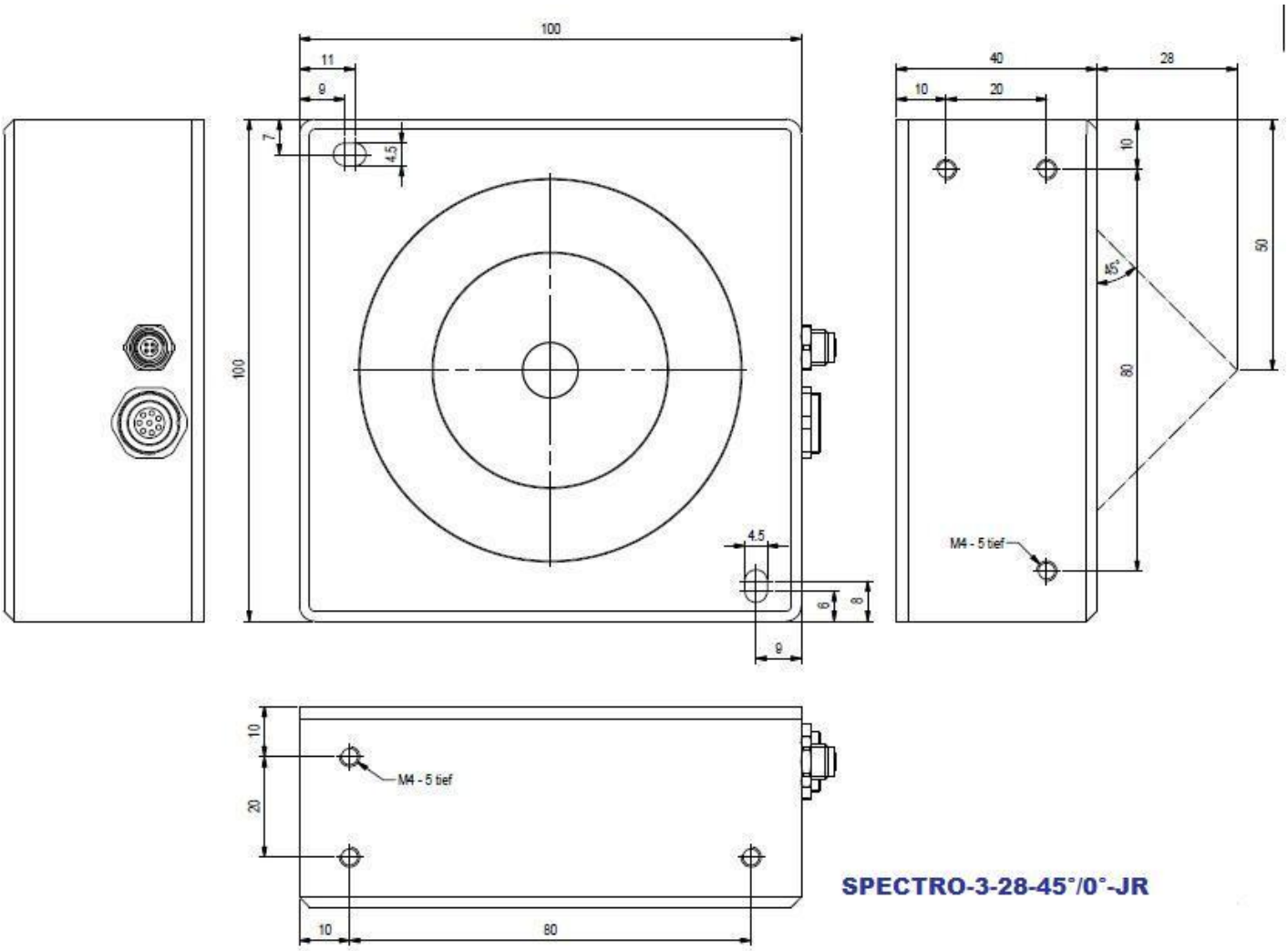
The color sensor type **SPECTRO-3-28-45°/0°-JR** comes with a ring arrangement of warm white LEDs. At this juncture the LEDs are directed symmetrically under an angle of 45° to the vertical axis. Furthermore, the optical axis of all LEDs intersects at a distance of 28mm from the sensor.
It should be pointed out, that the sensor suppresses the direct reflection to a high degree and the measurement result is nearly independent of the angular alignment of the object in relation to the symmetrical axis of the color sensor.