A-LAS Series

A-LAS-12/90-...

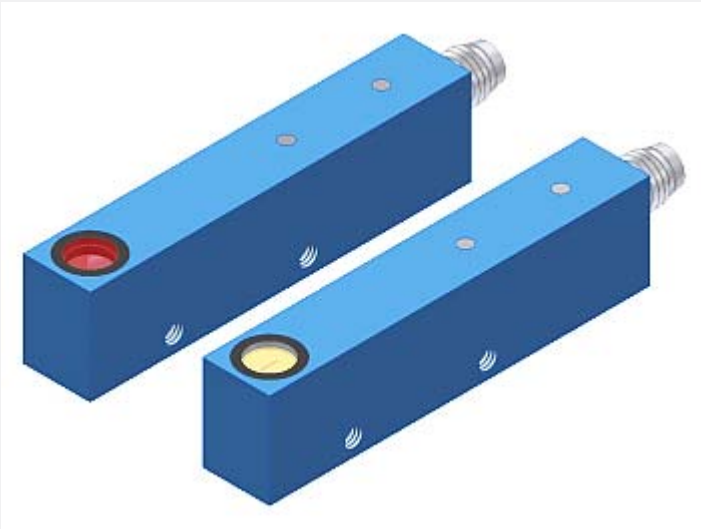

- Analog signal (0...+10V) in connection with an electronic control unit type AGL3, AGL4, AGL4-HS, AGL-DIF, SI-CON11 (without PC connection) or SI-CON4, SI-CON8, SI-CON34, A-LAS-CON1 (with PC connection and software) (stand-alone operation of the light barrier is not possible)
- Parallel aligned, visible red laser beam (P<0.39 mW, 670 nm), **laser class 1**
- Various apertures available
- Measuring range up to 6.5 mm (depends on aperture used)
- Working range max. 10 m (depends on aperture used)
- Insensitive to outside light due to interference filter
- Compact design, sturdy metal housing, IP67

Design

Product name:

A-LAS-12/90-(aperture)*-T (Transmitter)
A-LAS-12/90-(aperture)*-R (Receiver)

***Available apertures:**

Round apertures d... (mm):
d0.15
d0.2
d0.3
d0.5
d0.7
d1.0
d2.0
d3.0

Rectangular apertures AxB (mm):

0.2x1	1x4
0.3x0.5	1x5
0.3x0.8	1.2x2
0.3x1	1.5x0.3
0.3x1.5	2x0.75
0.3x3	2x1.2
0.5x0.3	2x1
0.5x1	2x3
0.5x4	2x6
0.5x6.5	3x0.3
0.75x2	3x0.75
0.75x3	3x2
0.75x5	4x0.5
0.8x0.3	4x1
0.8x6.5	5x0.75
1x0.2	5x1
1x0.3	6x2
1x0.5	6.5x0.5
1x1	6.5x0.8
1x2	

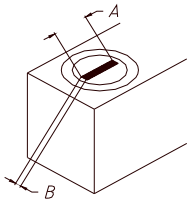

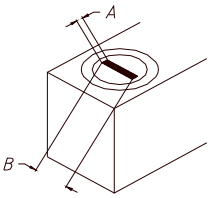

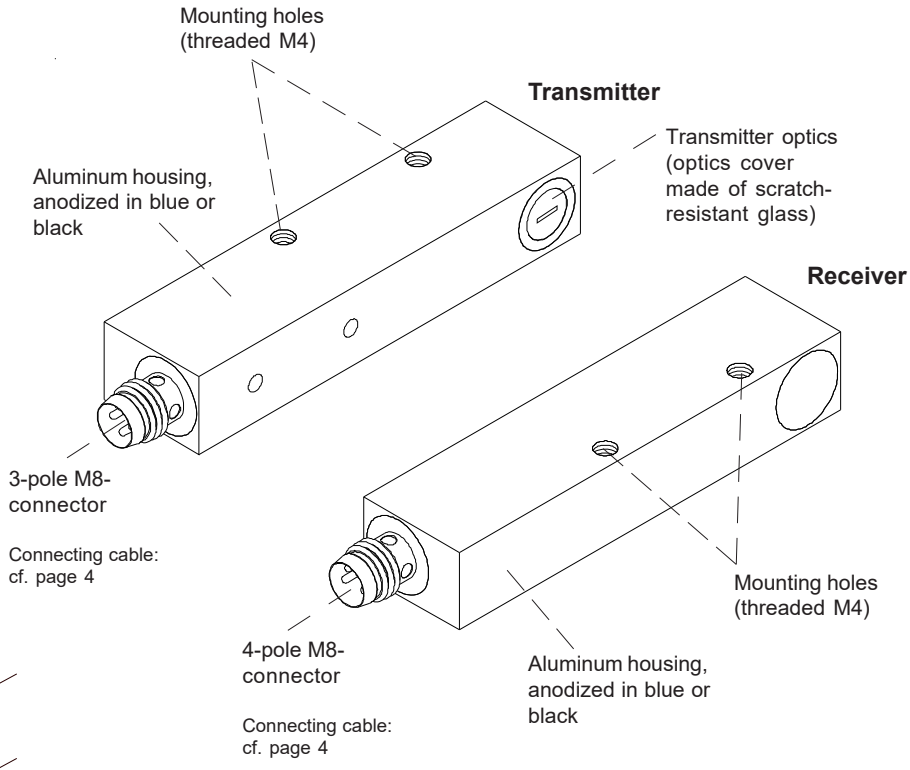

Technical Data

Type	A-LAS-12/90
Shape	Split laser light barrier in rectangular housing. Various round and rectangular apertures are available.
Laser	Solid-state laser, 670 nm, DC-operation, 0.39 mW max. opt. power, laser class 1 acc. to DIN EN 60825-1. The use of these laser transmitter therefore requires no additional protective measures.
Available aperture sizes	Cf. page 1
Measuring range	Up to 6.5 mm (depends on the aperture used)
Working range	Max. 10 m (depends on the aperture used)
Min. detectable object	Typ. 0.8% of aperture size
Reproducibility	Typ. 0.8% of aperture size, with threshold correction (via electronic control unit): typ. 0.1% of aperture size
Threshold correction	Can be activated via a software-controlled electronics of type A-LAS-CON1, SI-CON4, SI-CON8, or SI-CON34
Optical filters	Red light filter RG 630 and interference filter
Voltage supply	Transmitter: +5VDC, receiver: +5VDC
Ambient light (outside light)	With 5000 Lux ambient light around optical receiver unit typ. < 300mV influence on analog signal (0...+10V)
Analog output	0 ... +10V (in connection with any electronic control unit of A-LAS Series)
Band width analog signal	100 kHz (-3 dB)
Current control input (I-CONTROL)	0V ... 5V, laser power decreases linear to increase of voltage: 0V: full power, 5V: laser off
Sensitivity setting (switching threshold)	Via software (with control electronics A-LAS-CON1, SI-CON4, SI-CON34, or SI-CON8) or via potentiometer (with control electronics AGL4 or AGL4-HS)
Gain (analog signal)	Via software (with control electronics A-LAS-CON1, SI-CON4, SI-CON34, or SI-CON8) or via potentiometer (with control electronics AGL4, AGL4-HS, AGL-DIF, or SI-CON11)
Current consumption	Transmitter: typ. 50 mA, receiver typ. 20 mA
Operating temperature range	0°C ... +50°C
Storage temperature range	-20°C ... +85°C
Type of connector	Transmitter: 3-pole M8-connector, receiver: 4-pole M8-connector
Housing material	Aluminum, anodized in blue or black
Housing dimensions	Transmitter and receiver: each LxWxH approx. 68 mm x 12 mm x 17 mm (without connector M8)
Enclosure rating	IP67
EMC test acc. to	DIN EN 60947-5-2 CE

Laser Information

The laser transmitters of A-LAS series comply with laser class 1 according to EN 60825-1. Under reasonably foreseeable conditions a class 1 laser is safe. The reasonably foreseeable conditions are kept during specified normal operation. The use of these laser transmitters therefore requires no additional protective measures.

The laser transmitters of A-LAS series series are supplied with an information label „CLASS 1 Laser Product“.

Class 1 Laser Product
IEC 60825-1: 2014
P<0.39 mW; λ=670 nm

COMPLIES WITH 21 CFR 1040.10 AND 1040.11 EXCEPT FOR CONFORMANCE WITH IEC 60825-1 ED. 3, AS DESCRIBED IN LASER NOTICE NO. 56, DATED MAY 8, 2019.

Dimensions

A-LAS-12/90-...-T (Transmitter):

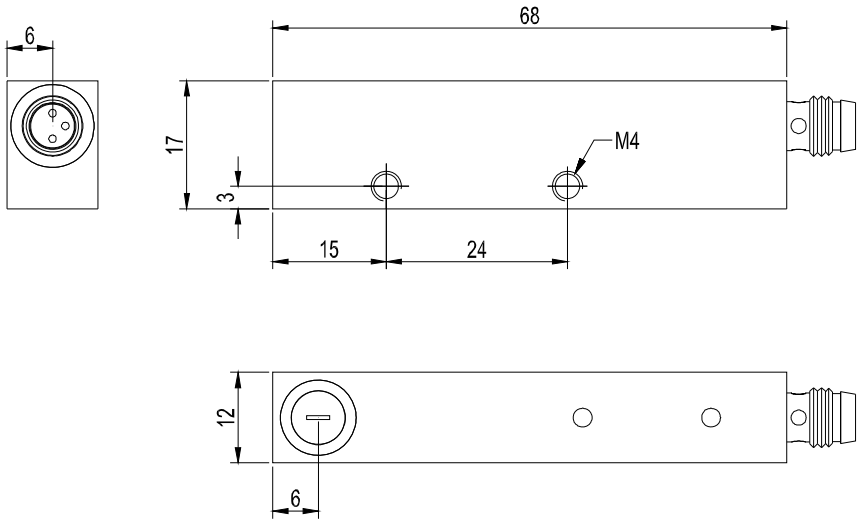

All dimensions in mm

A-LAS-12/90-...-R (Receiver):

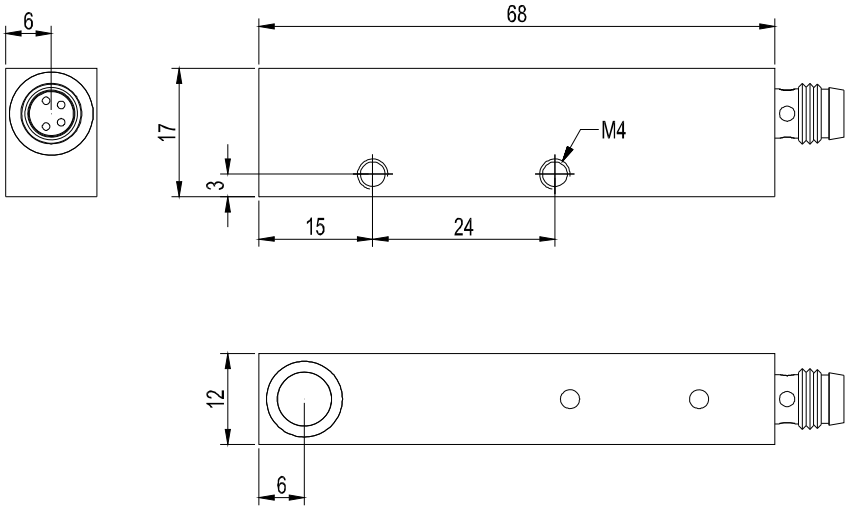

Connector Assignment

Receiver: 4-pole M8-connector

Pin No.:	Assignment:
1	+5 VDC
2	GND (0V)
3	SHIELD
4	ANALOG

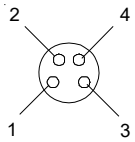

Transmitter: 3-pole M8-connector

Pin No.:	Assignment:
1	+5 VDC
3	GND (0V)
4	I-CONTROL (0V...+5V)

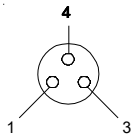

Connecting cables:
For use with SI-CON4:
cab-las3-(length) or cab-las3-w-(length) für transmitter
cab-las4-(length) or cab-las4-w-(length) für receiver
(standard length each 1m, also available lengths: 2m, 3m, or 5m)

For use with AGL4, AGL4-HS, AGL-DIF, SI-CON11, SI-CON8, SI-CON34, A-LAS-CON1:
cab-las-y-(length) or
cab-las-y-w-(length)
(standard length each 1m, also available lengths: 2m, 3m, or 5m)

For use with AGL3:
no connecting cable is necessary

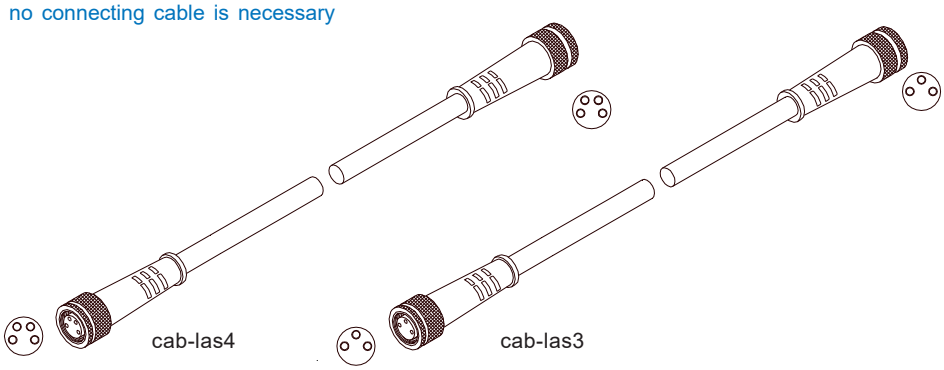

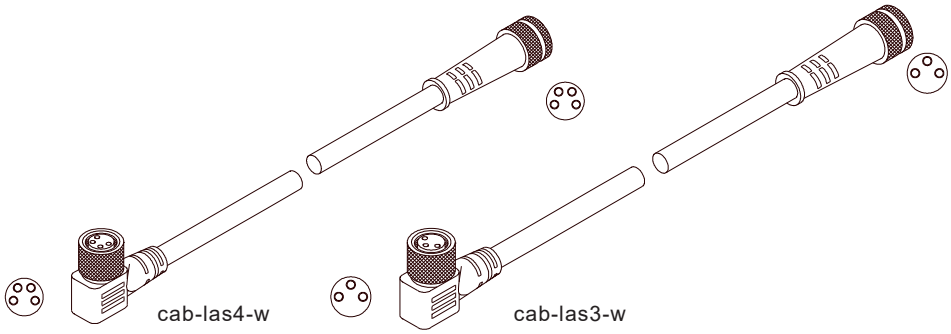

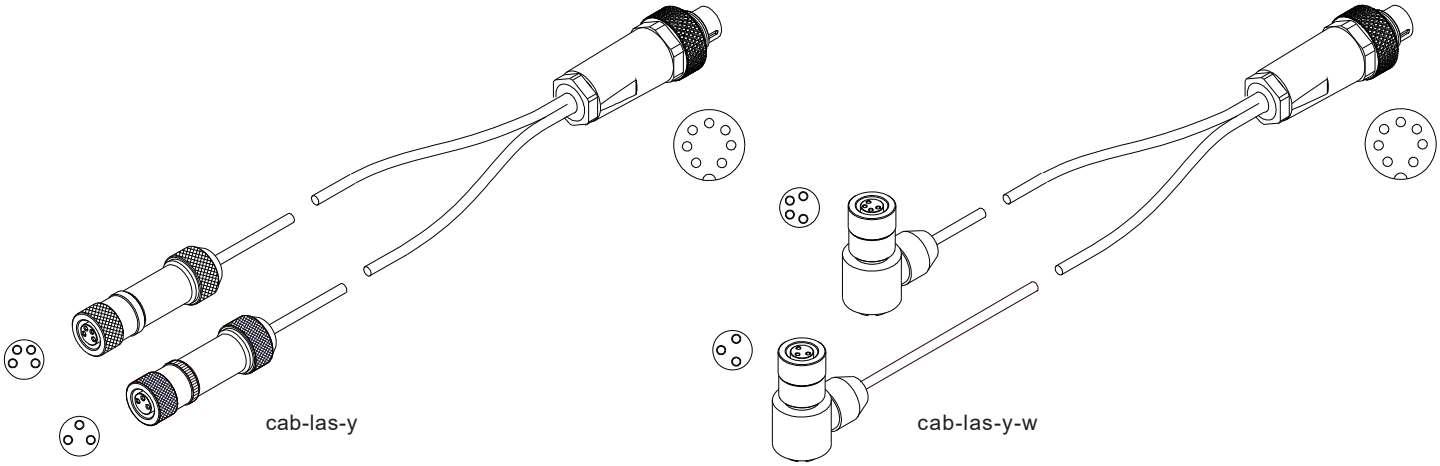

Electronic Control Units

Suitable electronic control units:

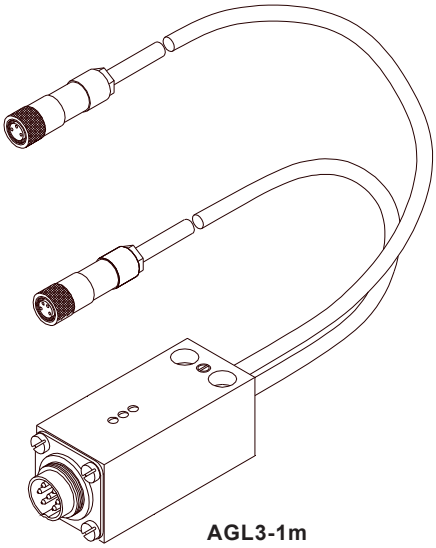

AGL3-1m
AGL3-2m
AGL3-3m
AGL3-4m
AGL3-5m

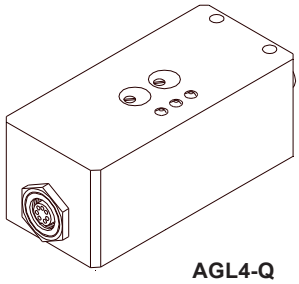

AGL4-Q
AGL4-Qinv
AGL4-Qinv-200ms

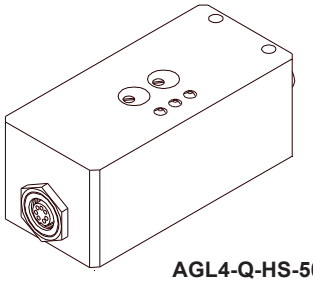

AGL4-Q-HS-500kHz-24V_LED
AGL4-Qinv-HS-500kHz-24V_LED

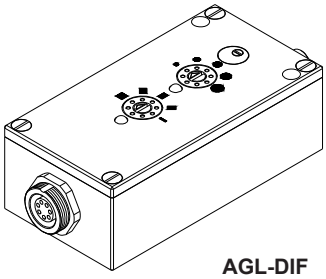

AGL-DIF

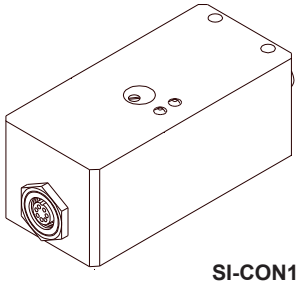

SI-CON11-0/20
SI-CON11-0/20-5V
SI-CON11-0/20-IC
SI-CON11-4/20
SI-CON11-4/20-IC
SI-CON11-5/25
SI-CON11-5/25-IC

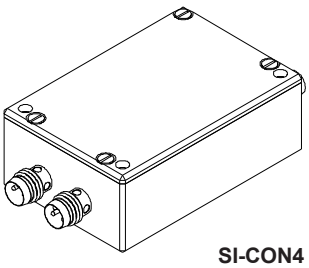

SI-CON4
(incl. Windows® PC software
A-LAS-Scope)

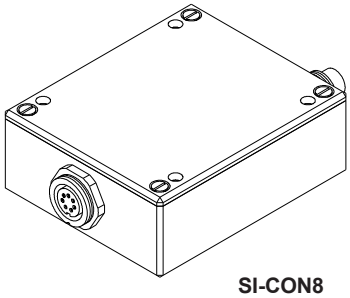

SI-CON8
(incl. Windows® PC software
SI-CON8-Scope)

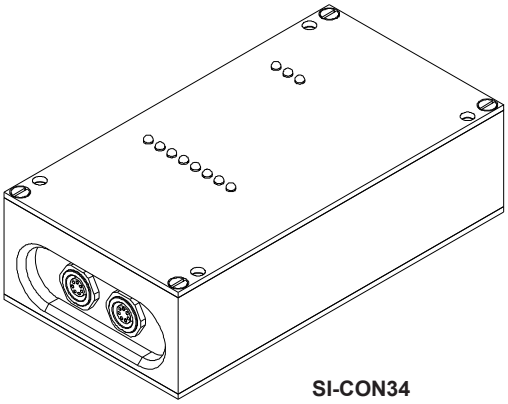

SI-CON34
(incl. Windows® PC software
SCOPE34)

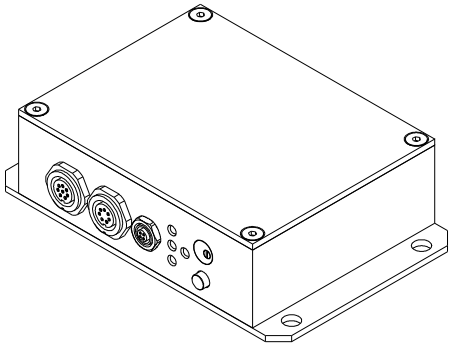

A-LAS-CON1
(incl. Windows® PC software
A-LAS-CON1-Scope)